April 15, 2022

Mr. Dirk Danley
Senior Planner
Lee County Community Development, Zoning Section
1500 Monroe Street
Fort Myer, FL 33908

Re: OAK PARK VILLAGE MHPD
3rd INSUFFICIENCY COMMENT LETTER
DCI2021-00019

Dear Dirk:

Enclosed please find responses to your insufficiency letter dated *February 18, 2022*. The following information has been provided to assist with the approval process:

1. Sufficiency Comment Response Letter
2. Wet slips and boat doc narrative from Lee County MPP
3. 18' Easement Paperwork
4. Revised survey, legal sketch and description to address easement to outdoor storage
5. Revised MCP showing legal easement to outdoor storage area
6. Revised deviations document addressing easement area deviation
7. Public Meeting #2 Minutes

The following is a list of staff comments with our responses in **bold**:

Zoning Review:
1. Staff is able to find the meeting advertisement and sign in sheet for the North Olga Community meeting, but staff is not able to locate meeting minutes from this meeting. Please provide these minutes.

RESPONSE: Meeting minutes are attached to the submittal.

Development Services Review
1. The documents provided do not demonstrate legal access. The documents describe a right-of-way in through the Francis W Perry subdivision. The parcel in question is located in the A.M. Stevens subdivision and different section. Staff recommends the applicant review plat book 1 page 28 as well as official record book 926 page 508 as well as the property deeds that are adjacent to the right-of-way. These documents may provide the legal access necessary. Please provide a sketch and description of any documents provided to demonstrate legal access.

RESPONSE: Attached in the submittal are the easements and deed proving access and the legal sketch and description demonstrating the area as reaching the property and south to Pearl Street. Also included is a revised MCP that includes the easement area survey.

2. Deviation (7) is only requesting a deviation from the ROW width requirement of 40'. The subject right-of-way is located in the urban community future land use. Elements required in the Land Development Code for local urban roads are not shown in the provided cross section. Urban cross sections require closed drainage, curb and gutter and sidewalks on both sides of the road. Additionally, LDC 10-296(d)(3) requires that any deviations from these requirements must meet the standards and criterial established by FDOT in the Florida Greenbook. As previously requested, please provide an analysis

and justification in accordance with the Greenbook for any proposed deviations from the requirements in LDC 10-296. This analysis and justification must include the methodology established in the Florida Greenbook.

RESPONSE: See the separate Deviations and Justification Memo regarding the roadway in the 18' easement.

Natural Resources Review

1. Please note that storage of boats which have access to the boat launch must be compliant with the Manatee Protection Plan (Policy 128.4.6). This is considered an expansion of slips beyond the wet slips located within the boat basin. Please submit a Manatee Protection Plan Evaluation which address the amount of slips permissible in the Oak Park Mobile Home Village.

POLICY 128.4.6: Proposed boat access facilities and expansion of existing facilities will be evaluated in accordance with the Lee County MPP, dated June 17, 2004 and approved by the Board of County Commissioners on June 29, 2004. Specifically, Section 8 of the MPP, Marine Facility Siting Requirements, will be used to determine the appropriate number of slips as defined by the MPP for each new project or allowable expansion. (Ord. No. 00-22, 07-09)

RESPONSE: The facilities at Oak Park Village are private with a boat launch only accessible to residents of Oak Park Village and 30 wet slips. The Lee County MPP, dated June 17, 2004 and approved by the Board of County Commissioners on June 29, 2004, permits the Oak Park Village Co-op, Inc. up to 31 skips and one boat launch. The site is in compliance with the existing MPP as shown on page 133 of the MPP.

NELSON M J & EVELYN M	Multi-Family	Wet Slip	1
NEPTUNE CONDO	Multi-Family	Wet Slip	4
NEWMAN ROBERT A + RUTH	Marina	Ramp	1
NEWMAN ROBERT A + RUTH	Marina	Wet Slip	3
NEWMAN ROBERT A + RUTH	Other	Float/Ramp	1
NEWPORT MANORS CONDO	Multi-Family	Hoist	1
NEWPORT MANORS CONDO	Multi-Family	Wet Slip	5
NICHOLS DAVID J + NICOLE	Restaurant/Shop	Wet Slip	9
NOBBE MORRIS O III	Marina	Wet Slip	4
NOBBE O + BRENDA	Marina	Wet Slip	1
NU VIEW CONDO	Multi-Family	Hoist	1
NU VIEW CONDO	Multi-Family	Wet Slip	6
OAK PARK VILLAGE CO-OP INC	Multi-Family	Ramp	1
OAK PARK VILLAGE CO-OP INC	Multi-Family	Wet Slip	31
OCEAN HARBOR YACHT CLUB	Multi-Family	Hoist	27
OCEAN HARBOR YACHT CLUB	Multi-Family	Wet Slip	10
OCEAN ISLE RIVERVIEW CONDO	Multi-Family	Wet Slip	6
OCEAN ISLE RUBICAN CONDO	Multi-Family	Wet Slip	3
OCEAN ISLE RUBICAN II CONDO	Multi-Family	Wet Slip	3
OLD BRIDGE CORP	Multi-Family	Beached/Blocked	2
OLD BRIDGE CORP	Multi-Family	Hoist	12
OLD BRIDGE CORP	Multi-Family	Ramp	1
OLD BRIDGE CORP	Multi-Family	Wet Slip	150
OLD PELICAN BAY VILLAGE U-1	Multi-Family	Hoist	2
OLD PELICAN BAY VILLAGE U-1	Multi-Family	Wet Slip	1
OLD PELICAN BAY VILLAGE U-2	Multi-Family	Wet Slip	6
OLD PELICAN BAY VILLAGE U-3	Multi-Family	Beached/Blocked	2
OLD PELICAN BAY VILLAGE U-3	Multi-Family	Wet Slip	3
OLD PELICAN BAY VILLAGE U-6	Marina	Hoist	2
ONEILL KIMBERLY	Multi-Family	Wet Slip	1
ORCHID HARBOUR VILLAS	Multi-Family	Hoist	1
ORCHID HARBOUR VILLAS	Multi-Family	Wet Slip	11
ORNDAHL EVERT A +	Multi-Family	Wet Slip	1
ORR LOUIS H II	Multi-Family	Hoist	13
ORR LOUIS H II	Multi-Family	Wet Slip	1
OSPREY OF CAPE CORAL CONDO	Multi-Family	Hoist	6
OSPREY OF CAPE CORAL CONDO	Multi-Family	Wet Slip	5
OSTDIEK KURT D	Multi-Family	Wet Slip	1
OSTEGO BAY VILLAGE CONDO	Multi-Family	Hoist	14
OSTEGO BAY VILLAGE CONDO	Multi-Family	Wet Slip	10
OVERTON MARJORIE T TR	Industrial	Trailer	1
OVERVOLD CLIFTON	Multi-Family	Wet Slip	1
OWL CREEK BOAT WORKS +	Marina	Beached/Blocked	18
OWL CREEK BOAT WORKS +	Marina	Trailer	3
OWL CREEK BOAT WORKS +	Marina	Wet Slip	63

June 17, 2004 133

If you have any further questions, please do not hesitate to contact me directly at (239) 318-6707 or fdrovdlic@rviplanning.com.

Thank you,

RVi Planning + Landscape Architecture



Fred Drovdlic, AICP
Planning Director

OAK PARK VILLAGE MHPD

Schedule of Deviations and Justification – Easement – Deviation #7

OVERVIEW OF DEVIATION

Deviation (7) is requesting a deviation from LDC section 10-296 that requires public and private streets to be constructed and improved in accordance with the specifications set out in this section; to accomplish the following:

a) Acknowledge that the access for four residential houses and the open storage area for the Oak Park Village is a legal accessway that conforms to the definition of a driveway according to the Florida Greenbook; and

b) Allow the 18' wide easement improved to meet the minimum design specifications for a driveway according to the cross-section on the Master Concept Plan and the standards and criteria of the American Association of State and Highway Transportation Officials (AASHTO), A Policy on Geometric Design of Highways and Streets, as modified by Florida Department of Transportation (FDOT) Florida Greenbook.

The 18' legal easement is an accessway that is not open to the public, does not have public traffic and is not a connecting road to any other public roadway – it is in all functionality a driveway. The easement area dead-ends at the outdoor storage parcel which is private property. The only use is for the residents of the four residential homes to the east and west of the easement to have access to their homes and for the residents of Oak Park Village to park boats or RV's. Therefore, to apply the Lee County LDC 10-296, whose lowest specification for an urban area (Urban Community FLU) is a 40' close drainage access street with curb and gutter and sidewalks on both sides of the road, is not appropriate for a residential driveway. Nevertheless, LDC 10-296(d)(3) requires that any deviations from these requirements must meet the standards and criteria established by FDOT in the Florida Greenbook.

EVALUATION CRITERIA

According to the Manual of Uniform Minimum Standards for Design, Construction and Maintenance for Streets and Highways, i.e., the Florida Greenbook, the described 18' easement area fits the definition of a driveway that reads, "An Access from a public way (Pearl Street) to adjacent property."

Chapter 4 AASHTO Design Guidelines

Chapter 4 provides information regarding suitable criteria for low-volume local roads including operating speeds of 45mph or less, traffic volume of less than 400 vehicles per day. This Guideline also mentions that two-way single lane roads may be used in locations where traffic volumes are limited up to 100 vehicles per day. The accessway being proposed has been in operation for 50+ years. As mentioned in the overview, it only serves four (4) residential properties and the storage area for Oak Park Village, which is for long and short-term storage of boats and RV's for Oak Park Residents only, it is private property and not open to the general public. It is function as a driveway according to the AASHTO and Florida Greenbook with very low-volumes, not public road so a speed limit and other design criteria are not applicable. Therefore, the traffic volume criteria the driveway is consistent with this guideline.

This guidance document also indicates that, where applicable, typical two-way single lane roads are often unpaved and have widths in range from 11.5 to 13.0 feet and minimum travel lane widths of 10 feet. The proposed cross-section allows for a total stabilized surface with a travel lane with a minimum width of 10 feet to allow for proper drainage area and a minimum of 3:1 slope. The travel lane is slightly smaller than the typical minimum 11.5 width but will be paved rather than unpaved and address water runoff consistent with County code.

Pavement Surface

Per the Guidelines for Geometric Design of Low Volume Roads (2019), unpaved roads are generally appropriate for all functional subclasses of low-volume roads. Regardless, the applicant acknowledges the previous zoning requirement to pave the driveway to a minimally accepted standard according to Lee County LDC 10-296, Table 3, as depicted on the cross-section on the MCP, which is consistent with a much higher design requirement for a Privately Maintained Residential Local Streets as follows:

- Friction Course: None
- Structural Course: One inch asphaltic concrete FDOT type S-III, or SUPERPAVE 9.5
- Base: FDOT Optional Base Group 4 (six inches of compacted limerock)
- Subgrade: Six inch thick stabilized subgrade LBR40.

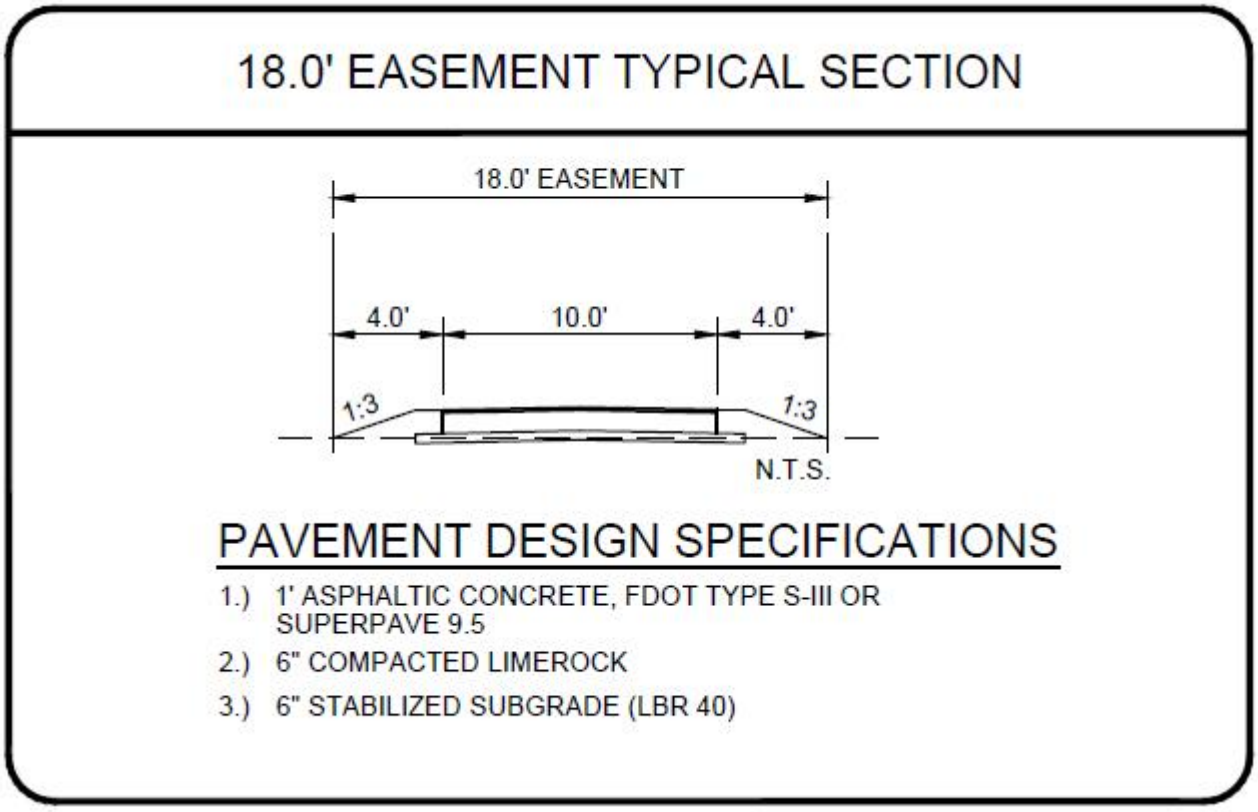

WALDROP ENGINEERING
PLANNING | CIVIL ENGINEERING | LANDSCAPE ARCHITECTURE

OAK PARK VILLAGE MHPD

Schedule of Deviations and Written Justification

DEVIATIONS

1. Deviate from Lee County Land Development Code (LDC) §34-2020(4)k. to reduce the minimum required parking spaces for a clubhouse (meeting hall) from 59 parking spaces to 26 parking spaces.

   JUSTIFICATION: Approved under VAR2009-00032.

2. Deviate from LDC Section 34-3005(b)(1) that requires all commercial or industrial outdoor storage to be shielded behind a continuous visual screening at least eight feet in height when visible from a residential use or residential zoning district; to allow a 6' high chain link fence with 60" landscaping to enclose the storage area.

   JUSTIFICATION: Approved as Condition 17.c. under Z-07-072(A) that included a 6' high chain link fence with a Type "C" buffer must be provided along the southern and western boundaries of the accessory storage area with the exception of the gate. The plantings must include shrubs, a minimum of 60 inches in height at the time of planting. This condition is repeated as Condition 2.f. in the Schedule of Uses and Development Parameters document in this submittal.

   It should be noted that the open storage area is for resident of Oak Park Village only, not a commercial storage area for public rent.

3. Deviate from Section 34-935 (g) (1) a. requiring 40 percent of the total area of the project to be common open space; to allow 13 acres, or 26% of the project, to be common open space as depicted on the MCP.

   JUSTIFICATION: Oak Park Village existing mobile home park has been developed prior to 1987 and is considered a legal lot of record according to Ordinance 86-36. As such the open space requirements of 40% for an MHPD were not part of the code at that time. Therefore, the deviation addresses the inability to precisely identify all open space in the existing park and to acknowledge that the 40% is unable to be met within the existing park (AREA A on the MCP).

   The additional two parcels that are not part of the existing Oak Park Village are 11.45 acres. They are to be used for passive recreation and outdoor storage. The large majority of the two parcels will remain as they are today. Depicted on the MCP is 6.0 acres of open space within the 11.54 acres of the two parcels which equals 52%. We exceed the requirement outside of the existing park.

4. Deviate from Section 34-935 (b) (1) b. requiring minimum setbacks of structures and buildings from development perimeter boundaries where all buildings and structures must be set back from the development perimeter a distance equal to the greater of fifteen (15) feet, if the subject property is, or will be zoned MHPD; to allow minimum setbacks of structures and buildings from development perimeter boundaries to be ten (10) feet for the existing Oak Park Village MHPD Boundary area consistent with the approved variance in Resolution Z-05-077.

   JUSTIFICATION: Oak Park Village was rezoned MHC-1 with a companion variance in Resolution Z-05-077 that approved a perimeter setback of 10 feet.

5. Deviate from Section 34-935 (e) (1) a. where in the MHPD districts, if the development contains or consists of a conventional subdivision for mobile homes, the lot dimensions and area specified in section 34-736 for the MH-1, MH-2, MH-3 or MH-4 mobile home districts shall apply as appropriate, unless other lot areas and dimensions are approved by the Board of County Commissioners; to allow property dimensions consistent with the original subdivision as an official lot of record.

   JUSTIFICATION: Oak Park Village mobile home park became a lot of record when the park was originally granted a Special Permit on June 2, 1970 (Zoning Resolution Z-70-56). The property zoned C-1 (south side of Pearl Street) was originally zoned from AU to BU-2A by Zoning Resolution Z-70-56 – the same resolution that granted a Special Permit for the mobile home park. The property was later rezoned to BU-2A to allow for the boat marina. The existing mobile home lots south of Pearl Street were then rezoned to MH-2 in November 1983 (Zoning Resolution ZAB-83-355).

   The mobile home park is a lot of record, pursuant to LDC Section 34-3272(1)(d), which allowed grandfathering of mobile home parks, including Oak Park Village, via Ordinance 86-36, where the requirement is that the park subsequently obtained on or before June 3, 1987, approval by the Board of County Commissioners of a site plan which identifies individual sites within the park and said sites meet the minimum lot size and setbacks consistent with the zoning regulations as set forth in Section 602.03 and its applicable subsection based on the date of the Resolution.

   A site plan as required by Ordinance 86-36 and codified in LDC Section Sec. 34-3272(1)d.6., the lot or record is met by the approval of the development order 3-13-84 (drainage plan pictured below).

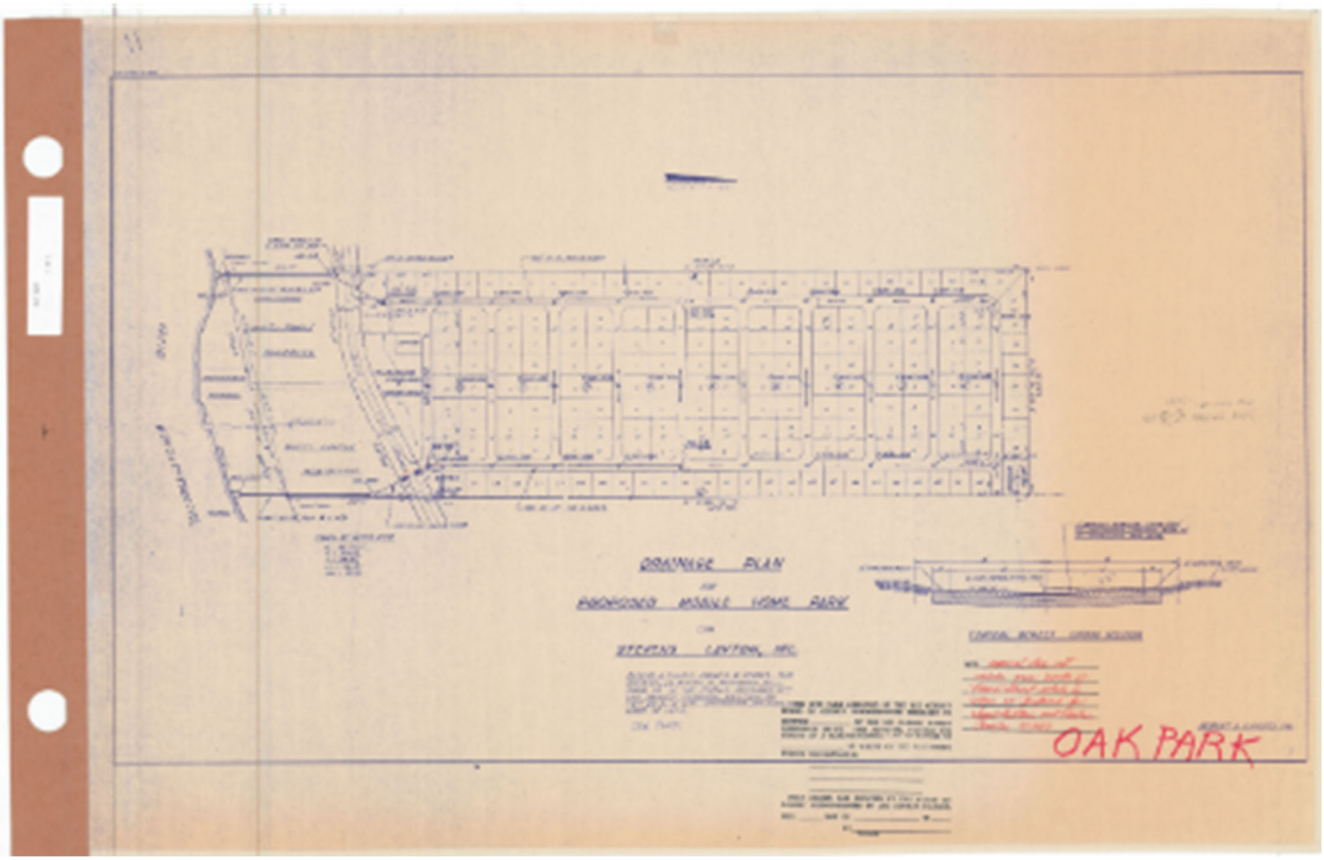

Additionally, the intent of this rezoning is to bring all properties owned by Oak Park Village Co-Op under a common MHPD and in doing so codify the existing Oak Park Village development, which was noted as a legal conforming development when zoned MHC-1 and granted a perimeter setback variance in Z-05-077. The MHPD regulations are greater than MHC-1 since they use MH-1, MH-2, MH-3 or MH-4 mobile home districts development parameters. Therefore, the deviation for lot area, lot width and lot depth are necessary to reflect the existing park as developed.

6. Deviate from Section 34-736 concerning setbacks from lot lines and separation of buildings for mobile homes in mobile home planned developments where the front, side and rear setbacks for the MH-1, MH-2, MH-3 or MH-4 mobile home district shall apply as appropriate, unless other lot areas and dimensions are approved by the Board of County Commissioners; to allow setbacks as follows:

AREA A – EXISTING OAK PARK VILLAGE

Minimum Setbacks:

Oak Park Village mobile home park became a lot of record when the park was originally granted a Special Permit on June 2, 1970 (Zoning Resolution Z-70-56) and the site plan requirement was met with the approval of development order 3-13-84.

AREA B – OUTDOOR STORAGE AND RECREATION AREA

Minimum Setbacks:

Pearl (Offsite) Street:	25 feet
Park perimeter (MHPD boundary for AREA B):	15 feet
Outdoor Storage Area:	15 feet
Water Body:	5 feet (MHC-1 regulations)

JUSTIFICATION: The intent of the rezoning was to bring all properties owned by Oak Park Village Co-Op under a common MHPD and in doing so codify the existing Oak Park Village development according to the designation of the existing mobile home park as an official lot of record by Ordinance 86-36 and codified in LDC Section Sec. 34-3272(1)d.6. Oak Park Village mobile home park became a lot of record when the park was originally granted a Special Permit on June 2, 1970 (Zoning Resolution Z-70-56) and the site plan requirements was met with the approval of development order 3-13-84.

All of the internal design has been established and is codified., which was noted as a legal conforming development when zoned MHC-1 and granted a perimeter setback variance in Z-05-077. The MHPD regulations are greater than MHC-1 since they use MH-1, MH-2, MH-3 or MH-4 mobile home districts development parameters. Therefore, the deviation for setbacks is necessary to reflect the existing park as developed and MHC-1 regulations.

7. Deviate from Section 10-296 that requires public and private streets to be constructed and improved in accordance with the specifications set out in this section; to accomplish the following:
    a) Acknowledge that the access for four residential houses and the open storage area for the Oak Park Village is a legal accessway that conforms to the definition of a driveway according to the Florida Greenbook; and
    b) Allow the 18’ wide easement improved to meet the minimum design specifications for a driveway according to the cross-section on the Master Concept Plan and the standards and criteria of the American Association of State and Highway Transportation Officials (AASHTO), A Policy on Geometric Design of Highways and Streets, as modified by Florida Department of Transportation (FDOT) Florida Greenbook.

JUSTIFICATION: An 18’ easement has been in place since 1974 to serve as a driveway/access to four residential properties and access to the parcel owned by Oak Park Village that has been and will continue to be used as open storage for residents of Oak Park Village RV, vehicles, etc. The deeds were recorded as Instrument Numbers: OR926PG508, OR2220PG3540, OR4555PG1718, and OR4803PG4306 and part of the subdivision as recorded in OR1PG28 in 1960. Additionally, survey work has determined the easement reaches from Pearl Street to the parcel. The surveyor has confirmed with field work and has created a legal sketch and description of the area, revised the survey by placing the area on the boundary survey and the area was also added to the MCP.

Past RPD zoning required the easement be brought up to County standards within the easement area which at that time was a Type "D" roadway, a standard that no longer exists in the LDC. The Type "D" roadway was in line with the use of the easement area, which functions not as a locally maintained road but as a private driveway that serves five parcels, one of which is the Oak Park Village's outdoor storage area. The easement area is not open to the public, does not have public traffic and is not a connecting road to any other public roadway. The easement area dead-ends at the outdoor storage parcel which is private property. The only use is for the residents of the four residential homes to the east and west of the easement to have access to their homes and for the residents of Oak Park Village to park boats or RV's. Therefore, to apply the Lee County LDC 10-296, whose lowest specification for an urban area (Urban Community FLU) is a 40' close drainage access street with curb and gutter and sidewalks on both sides of the road, is not appropriate for a residential driveway. Nevertheless, LDC 10-296(d)(3) requires that any deviations from these requirements must meet the standards and criteria established by FDOT in the Florida Greenbook. Please see the separate Deviations Document addressing the easement and the FDOT standards as applicable.

Oak Park Village is agreeing to improve the accessway to a 14' paved roadway as depicted in the cross-section on the MPC which is design consistent with the criteria in LDC 10-296, Table 3 for minimum pavement design of a privately maintained residential local street.

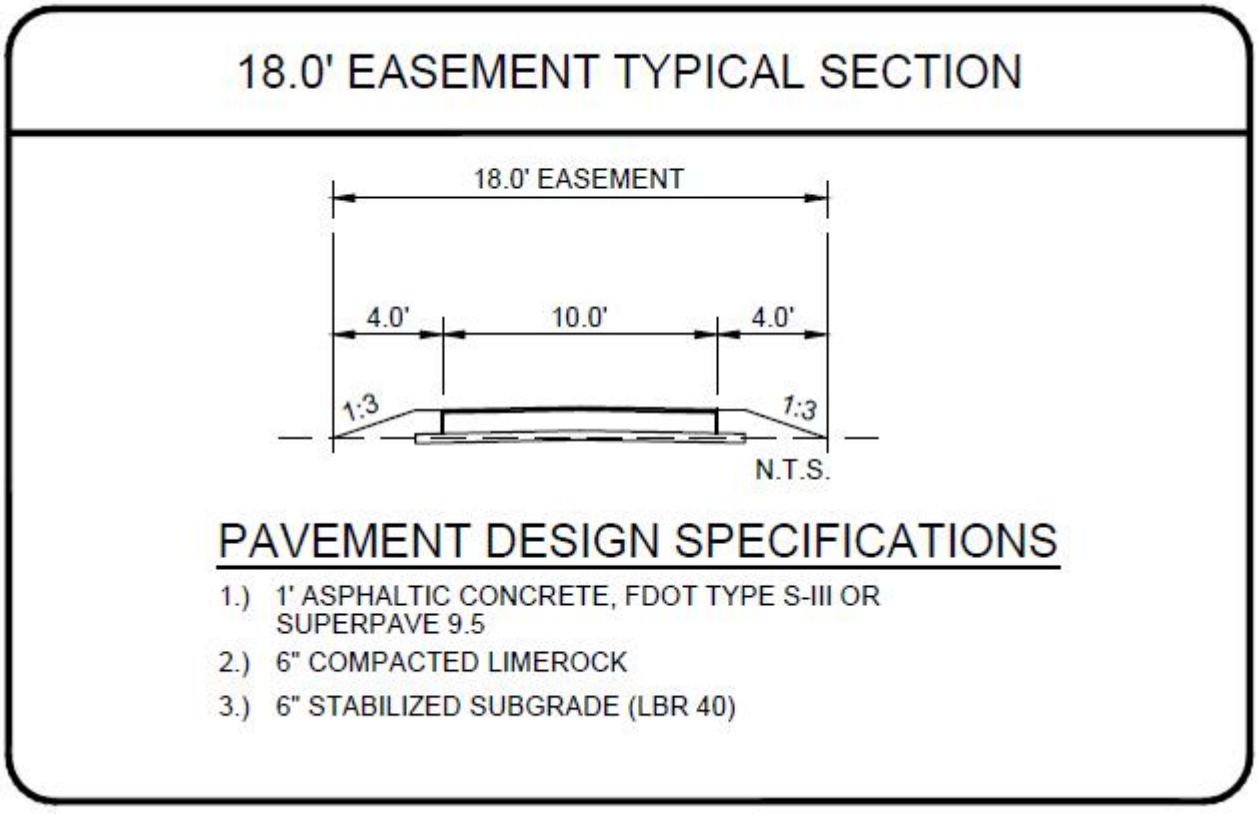

WALDROP ENGINEERING
PLANNING | CIVIL ENGINEERING | LANDSCAPE ARCHITECTURE
FORT MYERS Bonita Springs Tampa Orlando Sarasota
1514 Broadway, Suite 201, Fort Myers, FL 33901
p. (239) 344-0000 f. (239) 344-3444

Memorandum

To: **Dirk Danley, AICP**

From: **Fred Drovdlic, AICP**

cc: **Oak Park Village Secretary**

Date: **Friday, September 24, 2021**

Subject: **Oak Park Village MHPD (DCI2021-00019)**
Neighborhood Information Meeting Synopsis

Waldrop Engineering, P.A., the Oak Park Village secretary, Carlyon, and Oak Park Village Co-Op board member, Bobbie Jo, conducted a Neighborhood Information Meeting (NIM) on *Friday, September 24, 2021*. The meeting was held at 4:30 p.m. at The Boathouse Tiki Bar & Grill - Fort Myers, 17101 State Rd 31, Fort Myers, FL 33905.

The sign-in sheet is attached as Exhibit "A" and demonstrates zero residents were in attendance. The proposed master concept plan and aerial was available providing the project overview and development regulations from the schedule of uses.

Fred Drovdlic (Agent) conducted the meeting. An overview of the proposed amendment and status and timeline was presented. The meeting was held open until 5:30 and closed after no residents/public attended.

Exhibit A

LEE COUNTY
OAK PARK VILLAGE MHPD ZONING

Public Information Meeting

September 24, 2021

Name	Address	E-Mail Address (PLEASE PRINT CLEARLY)
Carolyn Mona Hietala	1 Grape Alva	Carolyn@OakPark-Village.com
Barbara Jo Donahue	12 Elder ST Alva	Bjdonawho@yahoo.com

716188
GRANT OF EASEMENT

63052

OFF. REC. 926 PAGE 508

4 COR

Warren Sears and Nellie Sears- Husband and wife
To the Public:

Grants right-of-way for ingress and egress over and across the easterly 15 ft. of the west [redacted] 125.05 ft of the south 396 ft. of lot J of A.M.Stephens Subdivision, recorded in Plat book 1 at page 28 of the Public Records of Lee County.

Acknowledges

Witness:
Connie F. Bull
Addie M. Willey

Signatures
Warren Sears
Nellie Sears.

STATE OF FLORIDA :
)
COUNTY OF LEE :

I HEREBY CERTIFY that on this day, before me, an officer duly authorized in the State and County aforesaid to take acknowledgments, personally appeared WARREN SEARS and NELLIE SEARS, husband and wife, and acknowledged before me that they executed the foregoing instrument for the purposes therein expressed.

WITNESS my hand and official seal in the County and State aforesaid this 7th day of April, A.D. 1973.

Connie F. Bull
Notary public, State of Florida at Large

My Commission Expires: April 20, 1974

This instrument prepared by:
Connie F. Bull

RECORDED IN OFFICIAL RECORDS OF LEE COUNTY, FLORIDA
APR 9 3 21 PM '73
SAL CERACI
CLERK OF CIRCUIT COURT
BY [illegible]

10-50

AFFIDAVIT

STATE OF FLORIDA
COUNTY OF _____

3021920

BEFORE ME, the undersigned authority personally appeared NELLIE P. REWIS, f/k/a NELLIE P. SEARS, a/k/a NELLIE SEARS, who, being by me first duly sworn, deposes and says that :

1. Affiant is over the age of eighteen years and otherwise sui juris.

2. Affiant and WARREN H. SEARS were husband and wife, being married on November 2, 1932, and took title to the following described real property in Lee County, as tenants by the entirety. The real property is more particularly described as follows, to-wit:

The parcel hereon described is situated in Block "J" in A. M. Stevens Subdivision as recorded in Plat Book 1, page 28, public records of Lee County, Fla. in Section 22, T 43 S, R 27 E, more particularly described as follows:

Commencing at the North right-of-way of Pearl Street and the West line of said Block "J"; Thence N 87°00'-00" E (basis for bearing is assumed) along the North right-of-way of Pearl Street, a distance of 110.05 feet.; Thence N 00°03'-35" E, a distance of 217.29 ft. to the Point of Beginning; Thence continue N 00°03'-35" E, a distance of 178.71 ft.; Thence N 87°00'-00" E, a distance of 122.05 ft.; Thence S 00°03'-35" W, distance of 178.71 ft.; Thence S 87°00'-00" W, a distance of 122.05 ft. to the Point of Beginning, containing 0.5 ± Acres.

The above described is subject to a 15.00 ft. roadway easement along and across the Western boundary thereof.

Proofed

3. WARREN H. SEARS died on January 13, 1981 as evidenced by the Certificate of Death which is attached hereto and made a part hereof.

4. At the time of his death, NELLIE P. REWIS, f/k/a NELLIE P. SEARS, a/k/a NELLIE SEARS, and the said WARREN H. SEARS owned the above described real property as tenants by the entirety.

FURTHER, YOUR AFFIANT SAITH NOT.

Nellie P Rewis

NELLIE P. REWIS, f/k/a NELLIE P. SEARS, a/k/a NELLIE SEARS
Affiant

SWORN TO AND SUBSCRIBED to before me this 6th day of April, 1991.

Notary Public
My Commission Expires:

(AFFIX SEAL)

NOTARY PUBLIC, STATE OF FLORIDA,
MY COMMISSION EXPIRES: SEPT. 24, 1992.
BONDED THRU NOTARY PUBLIC UNDERWRITERS.

OR2220 PG3540

RECORD VERIFIED - CHARLIE GREEN, CLERK
BY: SUSAN THOMPSON

CERTIFICATE OF DEATH OR2220 PG3541

FLORIDA

LOCAL FILE NO. 179

STATE FILE NO.

DECEDENT

1. NAME: First WARREN; Middle H.; Last SEARS
2. SEX: Male
3. DATE OF DEATH (Mo., Day, Yr.): Jan. 13, 1981
4. RACE: White
5a. AGE: 71
5b. UNDER 1 YEAR: MONTHS / DAYS
5c. UNDER 1 DAY: HOURS / MINUTES
6. DATE OF BIRTH: Apr. 4, 1909
7. COUNTY OF DEATH: Lee
7a. CITY, TOWN OR LOCATION OF DEATH: Fort Myers
7b. HOSPITAL OR OTHER INSTITUTION: Lee Memorial Hospital
7c. IF HOSP OR INST: Inpatient
8. STATE OF BIRTH: Georgia
9. CITIZEN OF WHAT COUNTRY: U.S.A.
10. MARRIED, NEVER MARRIED, WIDOWED, DIVORCED: Married
11. SURVIVING SPOUSE: Nellie Persons
12. SOCIAL SECURITY NUMBER: [redacted]
13a. USUAL OCCUPATION: Retired/Construction Worker
13b. KIND OF BUSINESS OR INDUSTRY: Construction
14. RESIDENCE—STATE: Florida
14b. COUNTY: Lee
14c. CITY, TOWN OR LOCATION: Alva
14d. STREET AND NUMBER: Box 72/Pearl Street
14e. INSIDE CITY LIMITS: No

PARENTS

15. FATHER—NAME: First Wiley; Middle; Last Sears
16. MOTHER—MAIDEN NAME: First Minnie; Middle; Last Ward
17a. INFORMANT—NAME: Nellie Sears
17b. MAILING ADDRESS: Box 72, Alva, Florida 33920

DISPOSITION

18a. BURIAL, CREMATION, REMOVAL, OTHER: Burial
18b. CEMETERY OR CREMATORY—NAME: Alva Cemetery
18c. LOCATION—CITY OR TOWN, STATE: Alva, Florida
19a. FUNERAL DIRECTOR: William Hanson
19b. FUNERAL HOME: Leo W. Engelhardt Funeral Home 2017 McGregor Blvd., Ft. Myers, Fla. 33901

CERTIFIER

20a. To the best of my knowledge, death occurred at the time, date and place and due to the cause(s) stated. (Signature and Title): Paul Butcher
20b. DATE SIGNED: 11/5/81
20c. HOUR OF DEATH: 2:40 a.
20d. NAME OF ATTENDING PHYSICIAN IF OTHER THAN CERTIFIER:
20e. NAME AND ADDRESS OF CERTIFIER (PHYSICIAN, MEDICAL EXAMINER): David R. Butcher, M.D. 2411 F. Mall Dr. Ft. Myers, Fla. 33901
21a. On the basis of examination, investigation, and/or information in my opinion death occurred at the time and place and due to the cause(s) stated. (Signature and Title):
21b. DATE SIGNED:
21c. HOUR OF DEATH:
21d. PRONOUNCED DEAD ON:
21e. AT:

CAUSE OF DEATH

22. REGISTRAR (Signature): Beverly J. Engelhardt, Sub-Reg.
23. DATE RECEIVED BY REGISTRAR: Jan. 16, 1981
24. IMMEDIATE CAUSE: PART I (a) Myocardial Failure — Interval between onset and death: 2 hr
DUE TO, OR AS A CONSEQUENCE OF: (b) Myocardial Infarct — Interval: 2 yrs
DUE TO, OR AS A CONSEQUENCE OF: (c) Atherosclerotic Coronary Disease — Interval: 6 yrs
PART II. OTHER SIGNIFICANT CONDITIONS: Stroke
25. AUTOPSY: NO
26. WAS CASE REFERRED TO MEDICAL EXAMINER: NO
27a. (Probable) ACCIDENT, SUICIDE or HOMICIDE, or UNDETERMINED:
27b. DATE OF INJURY:
27c. HOUR OF INJURY:
27d. DESCRIBE HOW INJURY OCCURRED:
27e. INJURY AT WORK:
27f. PLACE OF INJURY—at home, farm, street, factory, office building, etc.:
27g. LOCATION: STREET OR R.F.D. No.: CITY OR TOWN: STATE:

HRS form 512, Jan. 1979 (Rev. Nov. 1979) DCVS Form VS-2012

I hereby certify the above to be a true and correct copy of the local Registrar's record on file in the office of the Lee County Health Department at Fort Myers, Florida.

(WARNING: Not valid unless raised seal of the LEE COUNTY HEALTH DEPARTMENT is affixed.)

S E A L

Joseph W. Lawrence, M.D.
County Health Officer and Local Registrar

Jan. 20, 1981
Date

Attested: Lulu E. Hopkins
Deputy Registrar

91 MAY 13 AM 11:16
CHARLIE GREEN LEE CTY FL

Shirley M. JAY ✓
24 W. 8th. St.
Panama City, Fl. 32401

Prepared by and Return To:
Katie Cote
Platinum Land Title Agency, Inc.
2827 Lee Boulevard
Lehigh Acres, FL 33971

File Number: **0411194KC**

INSTR # 6601184
OR BK 04555 Pgs 1718 - 1719; (2pgs)
RECORDED 01/13/2005 09:44:33 AM
CHARLIE GREEN, CLERK OF COURT
LEE COUNTY, FLORIDA
RECORDING FEE 18.50
DEED DOC 349.30
DEPUTY CLERK K Crayton

WARRANTY DEED

This indenture made this **20th** day of **December, 2004**, by **George Richard, as Personal Representative of the Estate of Albert Richard,** hereinafter called the Grantor, to **Thomas M Beard and Nancy J Beard, husband and wife** whose post office is **19005 Orlando Road S, Fort Myers, FL 33912** hereinafter called the Grantee:

(Whenever used herein the term "grantor" and "grantee" include all the parties to this instrument and the heirs, legal representatives and assigns of individuals, and the successors and assigns of corporations)

Witnesseth, that the grantor, for and in consideration of the sum of **TEN AND NO/100 DOLLARS ($10.00)**, and other valuable considerations, receipt whereof is hereby acknowledged, hereby grants, bargains, sells, aliens, remises, releases, conveys and confirms, unto the grantee, all that certain land situate in the County of **Lee**, and State of **Florida**, viz:

PARCEL A:

A tract or parcel of land lying in Lot J of A. M. STEPHENS SUBDIVISION, according to the plat thereof, as recorded in Plat Book 1, Page 28, of the Public Records of Lee County, which tract or parcel is described as follows:

Beginning at the concrete monument marking the intersection of the west line of said Lot J with the north line of Pearl Street 80 feet wide run easterly along the north line of said street for 110.05 feet to a concrete monument; thence deflect 86 degrees 56' 25" to the left and run northerly parallel with the west line of said Lot J for 198 feet to a concrete monument; thence deflect 93 degrees 03' 35" to the left and run westerly parallel to the north line of said street for 110.05 feet to a concrete monument marking the intersection with the west line of said Lot J; thence run southerly along said west line for 198 feet to the point of beginning.

Subject to an easement for roadway purposes over and across the easterly 3 feet of the herein described parcel.

AND

PARCEL B:

A tract or parcel of land lying in Lot J of A. M. STEPHENS SUBDIVISION, according to the plat thereof, as recorded in Plat Book 1, Page 28, of the Public Records of Lee County, Florida, which tract or parcel is described as follows:

From the concrete monument marking the intersection of the west line of said Lot J with the north line of Pearl Street 80 feet wide run northerly along the west line of said lot for 198 feet to a concrete monument and the point of beginning. From said point of beginning continue northerly along said west line for 99 feet to a concrete monument; thence deflect 86 degrees 56' 25" to the right and run easterly parallel to the north line of said Pearl Street for 110.05 feet to a concrete monument; thence deflect 93 degrees 03' 35" to the right and run southerly parallel to the west line of said lot for 99 feet to a concrete monument; thence run westerly parallel with said north line of pearl street for 110.05 feet to the point of beginning.

Subject to an easement for roadway purposes over and across the easterly 3 feet of the herein described parcel.

PARCEL I.D. #: **22-43-27-02-000j0.0020**

SUBJECT TO Covenants, restrictions, and easements of record and taxes for the current year.

Said property is not the homestead of the Grantor(s) under the laws and constitution of the State of **Florida** in that neither Grantor(s) nor any members of the household of Grantor(s) reside thereon.

Together with all the tenements, hereditaments and appurtenances thereto belonging or in anywise appertaining.
To Have and to Hold, the same in fee simple forever.
And the grantor hereby covenants with said grantee that the grantor is lawfully seized of said land in fee simple; that the grantor has good right and lawful authority to sell and convey said land; that the grantor hereby fully warrants the title to said land and will defend the same against the lawful claims of all persons whomsoever; and that said land is free of all encumbrances except taxes accruing subsequent to December 31, **2005.**

© StreamLine Deed - Warranty Non-Homestead Rev. 12/28/2004 11:20:00 AM

In Witness whereof, the said grantor has signed and sealed these presents the day and year first above written.

Signed, sealed and delivered in our presence:

Witness:

Witness:

George Richard, as personal representative of the
Estate of Albert P Richard

STATE OF Maine
COUNTY OF Androscoggin

The foregoing instrument was acknowledged before me this 22 day of **December 2004**
by **George Richard** who is personally known to me or who has produced
ME DR Lic #4459041 as identification.

Notary Public

Printed Notary Name
My commission expires: 04/18/08

INSTR # 6899939
OR BK 04803 Pgs 4306 - 4307; (2pgs)
RECORDED 07/19/2005 02:00:29 PM
CHARLIE GREEN, CLERK OF COURT
LEE COUNTY, FLORIDA
RECORDING FEE 18.50
DEED DOC 1,274.00
DEPUTY CLERK L Wheat

Prepared by & Return to:
Title Professionals of Florida
13241 University Drive, # 103
Fort Myers, FL 33907
incidental to the issuance of a title insurance policy.
File Number: **paf-4890-05**
Parcel ID #: **22-43-27-02-000J0.002A**

WARRANTY DEED
(INDIVIDUAL)

This WARRANTY DEED, dated **07/14/05** by

Frank Nesselhauf and Marian Nesselhauf, husband and wife

hereinafter called the GRANTOR, to

Janice L. Cancel, a married person

whose post office address is:
P. O. Box 307, Alva, FL 33920

hereinafter called the GRANTEE:

(Wherever used herein the terms "Grantor" and "Grantee" include all parties to this instrument and the heirs, legal representatives and assigns of individuals, and the successors and assigns of corporations.)
WITNESSETH: That the GRANTOR, for and in consideration of the sum of $10.00 and other valuable considerations, receipt whereof is hereby acknowledged, hereby grants, bargains, sells, aliens, remises, releases, conveys and confirms unto the GRANTEE, all that certain land situate in **LEE** County, Florida, viz:

A Tract or Parcel of land lying in Lot J of A.M. Stephens Subdivision according to the plat thereof, as recorded in Plat Book 1, Page 28, of the Public Records of Lee County, Florida, which tract or parcel is described as follows:

From a concrete monument marking the intersection of the West line of said Lot J and the North line of Pearl Street 80 feet wide run Northerly along said West line for 297 Feet to a concrete monument and the Point of Beginning of the herein described parcel. From said Point of Beginning continue Northerly along said West line for 99 feet to a concrete monument; thence deflect 86 degrees 56' 25" to the right and run Easterly parallel with the North line of said Pearl Street 110.05 feet to a concrete monument; thence deflect 93 degrees 03' 35" to the right and run Southerly parallel to the West line of said Lot for 99 feet to a concrete monument; thence run Westerly parallel to the North line of said Pearl Street for 110.05 feet to the Point of Beginning. Subject to an Easement for roadway purposes over and across the Easterly 3 feet of the herein described parcel, and together with a part of right-of-way for ingress and egress over and across the Easterly 3 feet of the South 297 feet of the West 110.05 feet of said Lot J.

SUBJECT TO covenants, conditions, restrictions, reservations, limitations, easements and agreements of record, if any; taxes and assessments for the year 2005 and subsequent years; and to all applicable zoning ordinances and/or restrictions and prohibitions imposed by governmental authorities, if any.

TOGETHER with all the tenements, hereditaments and appurtenances thereto belonging or in anywise appertaining.

TO HAVE AND TO HOLD, the same in fee simple forever.

AND THE GRANTOR hereby covenants with said GRANTEE that except as above noted, the GRANTOR is lawfully seized of said land in fee simple; that the GRANTOR has good right and lawful authority to sell and convey said land; that the GRANTOR hereby fully warrants the title to said land and will defend the same against the lawful claims of all persons whomsoever.

FORM: WARR. DEED 2

IN WITNESS WHEREOF, GRANTOR has signed and sealed these presents the date set forth above.

SIGNED IN THE PRESENCE OF THE FOLLOWING WITNESSES:

Witness 1 Signature: M. A. Goss
Print Name: M. A. Goss

Witness 2 Signature: Deborah L Goralski
Print Name: DEBORAH L. GORALSKI

} Frank Nesselhauf
Frank Nesselhauf

Witness 1 Signature: M. A. Goss
Print Name: M. A. Goss

Witness 2 Signature: Deborah L Goralski
Print Name: DEBORAH L. GORALSKI

} Marian Nesselhauf
Marian Nesselhauf

State of **Florida**
County of **Lee**

I hereby Certify that on this day, before me, an officer duly authorized to administer oaths and take acknowledgments, personally appeared **Frank Nesselhauf and Marian Nesselhauf, husband and wife**, known to me to be the person(s) described in and who executed the foregoing instrument, who acknowledged before me that; he, she and/or they, executed the same, and an oath was not taken. (Check one:) ___ Said person(s) is/are personally known to me. ✓ Said person(s) provided the following type of identification: FL Drivers Licenses.

WITNESS my hand and official seal in the County and State last aforesaid this **July 14, 2005.**

(SEAL)

MARY ANNE GOSS
MY COMMISSION # DD 394700
EXPIRES: February 9, 2009
Bonded Thru Notary Public Underwriters

Mary Anne Goss
Notary Signature

Print/Type/Stamp Notary Signature

My Commission Expires:

DCI2021-00019 Lee County ePlan Additional Info Dated 04-21-2022

FORM 1104 WARRANTY DEED—(Short Form) 28 285090

OR BOOK 1 PAGE 28

This Indenture,

Wherever used herein, the term "party" shall include the heirs, personal representatives, successors and/or assigns of the respective parties hereto, the use of the singular number shall include the plural, and the plural the singular, the use of any gender shall include all genders, and, if used, the term "note" shall include all the notes herein described if more than one

Made this 4th *day of* April *A. D. 1960*

Between JOHN FICK and MILDRED FICK, husband and wife,

of the County of Lee *in the State of* Florida *party of the first part, and* HAROLD D. BARNEY and NETTIE M. BARNEY, husband and wife, as an estate by the entirety, whose address is Matlacha Station,

of the County of Lee *in the State of* Florida *party of the second part,*

Witnesseth, *that the said party of the first part, for and in consideration of the sum of* Ten Dollars and other valuable consideration ~~Dollars~~, *to him in hand paid by the said party of the second part, the receipt whereof is hereby acknowledged, has granted, bargained and sold to the said party of the second part forever, the following described land, situate, lying and being in the County of* Lee *, State of Florida, to wit:*



Lot 156 in that certain subdivision known as THIRD ADDITION TO ISLAND HARBORS, according to the map or plat thereof on file and recorded in the office of the Clerk of the Circuit Court of Lee County, Florida, in Plat Book 10 at page 97.







STATE OF FLORIDA, COUNTY OF LEE
FILED FOR RECORD
This 4th Day of April 1960 Record in OR
Book 1 Page 28 and Record Verified
D. T. FARABEE By E. Parker
Clerk Circuit Court Deputy Clerk

And the said party of the first part does hereby fully warrant the title to said land, and will defend the same against the lawful claims of all persons whomsoever.

In Witness Whereof, *the said party of the first part has hereunto set his hand and seal the day and year first above written.*

Signed, Sealed and Delivered in Our Presence:

[signature] John Fick
Ruth M. Foley Mildred Fick

State of Florida,
County of Lee

I HEREBY CERTIFY, *That on this day personally appeared before me, an officer duly authorized to administer oaths and take acknowledgments,* JOHN FICK and MILDRED FICK, husband and wife,

to me well known and known to me to be the individuals described in and who executed the foregoing deed, and they *acknowledged before me that* they *executed the same freely and voluntarily for the purposes therein expressed.*

WITNESS *my hand and official seal at* Fort Myers, *County of* Lee *, and State of Florida, this* 4th *day of* April *, A. D. 1960.*

My Commission Expires Jan 19, 1963 Ruth M. Foley
Notary Public

SKETCH TO ACCOMPANY DESCRIPTIONS

SKETCH OF A PARCEL OF LAND LYING IN
SECTION 22, TOWNSHIP 43 SOUTH, RANGE 27 EAST
LEE COUNTY, FLORIDA

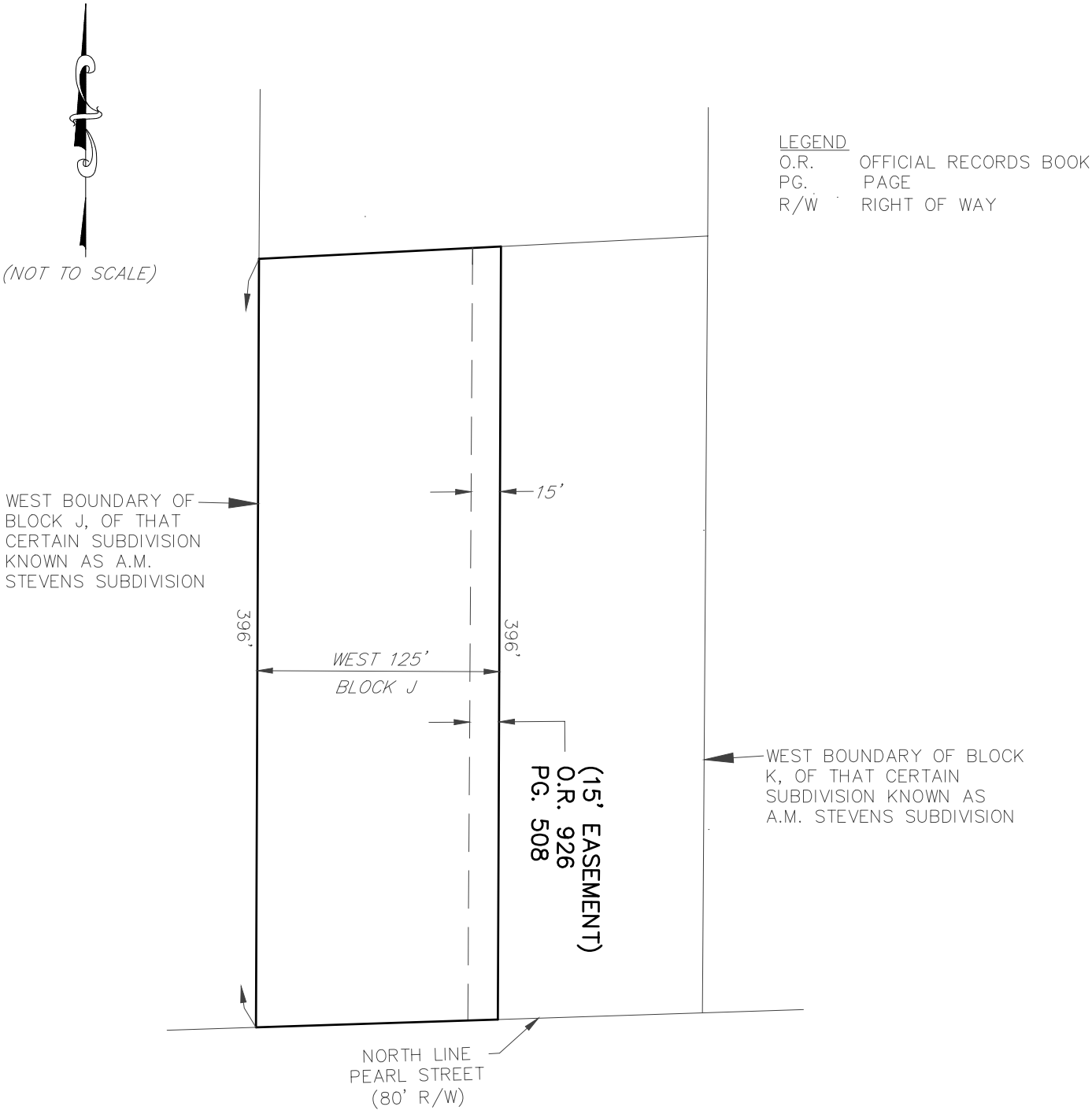

*** THIS IS NOT A SURVEY ***

Ken Pufahl, P.S.M.
PROFESSIONAL SURVEYOR AND MAPPER
FLORIDA CERTIFICATE No. 6126
DATE: 03/28/2022

KP Surveying, Inc.
LB NUMBER 8152
2802 W. Cypress Avenue S.E.
Fort Myers, Florida 33905
(239) 462-1901
www.kpsurveying.com

PROJECT No: 22-0091
DATE: 03/28/2022
SHEET 2 OF 2

KP Surveying, Inc.
LB NUMBER 8152
2802 W. Cypress Avenue S.E.
Fort Myers, Florida 33905
(239) 462-1901
www.kpsurveying.com

DESCRIPTION OF A PARCEL OF LAND LYING IN SECTION 22, TOWNSHIP 43 SOUTH, RANGE 27 EAST LEE COUNTY, FLORIDA

OFFICIAL RECORDS BOOK 926, PAGE 508

GRANTS RIGHT-OF-WAY FOR INGRESS AND EGRESS OVER AND ACROSS THE EASTERLY 15 FEET OF THE WEST 125 FEET OF THE SOUTH 396 FEET OF LOT J OF A.M. STEPHENS SUBDIVISION, RECORDED IN PLAT BOOK 1 AT PAGE 28 OF THE PUBLIC RECORDS OF LEE COUNTY.

Ken Pufahl, P.S.M.

PROFESSIONAL SURVEYOR AND MAPPER
FLORIDA CERTIFICATE No. 6126
DATE: 03/31/2022

SKETCH TO ACCOMPANY DESCRIPTIONS

SKETCH OF A PARCEL OF LAND LYING IN SECTION 22, TOWNSHIP 43 SOUTH, RANGE 27 EAST LEE COUNTY, FLORIDA

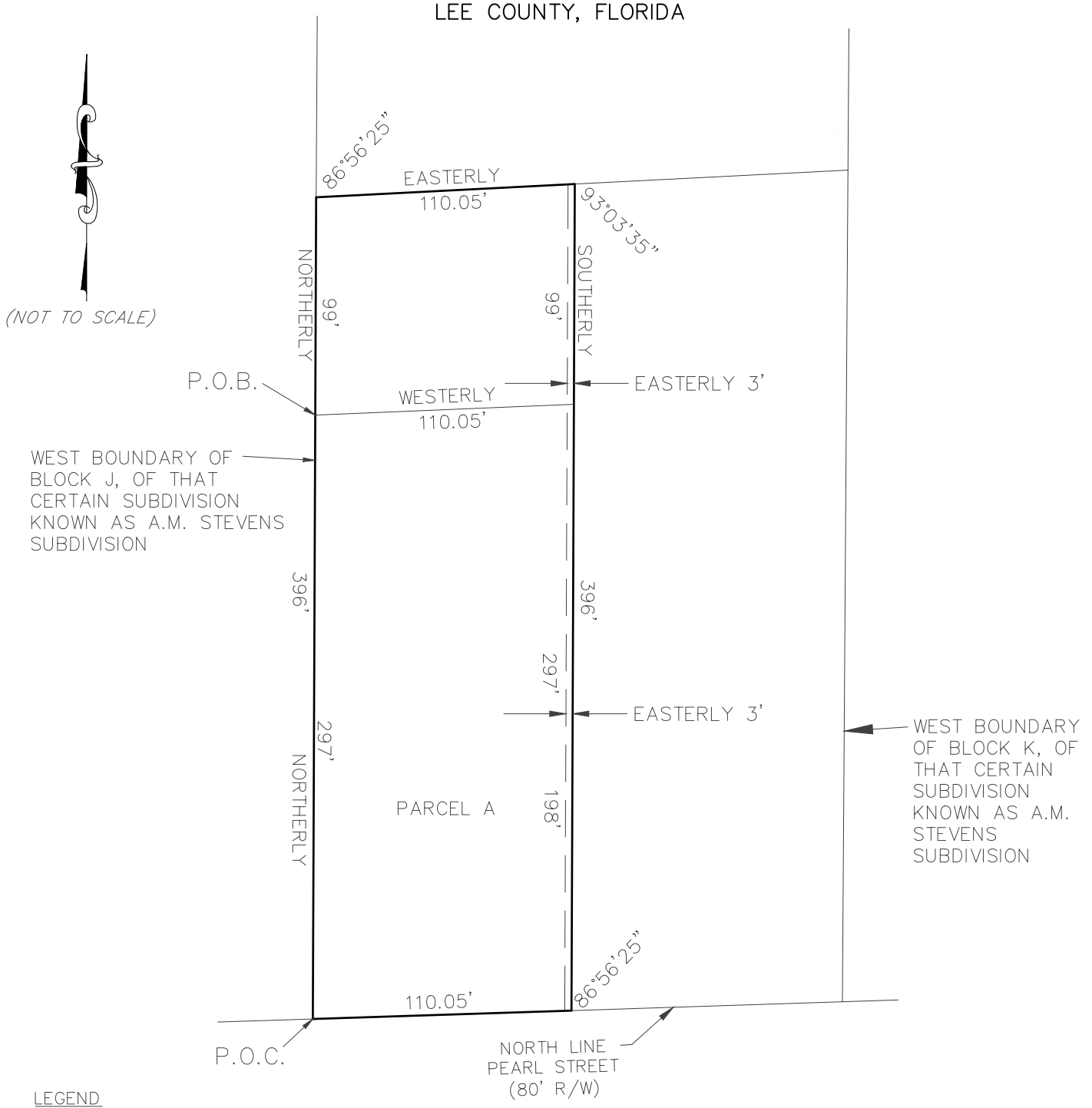

LEGEND
P.O.B. POINT OF BEGINNING
P.O.C. POINT OF COMMENCEMENT
R/W RIGHT OF WAY

*** THIS IS NOT A SURVEY ***

KP Surveying, Inc.
LB NUMBER 8152
2802 W. Cypress Avenue S.E.
Fort Myers, Florida 33905
(239) 462-1901
www.kpsurveying.com

Ken Pufahl, P.S.M.
PROFESSIONAL SURVEYOR AND MAPPER
FLORIDA CERTIFICATE No. 6126
DATE: 03/31/2022

PROJECT No: 22-0091
DATE: 03/31/2022
SHEET 2 OF 2

KP Surveying, Inc.
LB NUMBER 8152
2802 W. Cypress Avenue S.E.
Fort Myers, Florida 33905
(239) 462-1901
www.kpsurveying.com

DESCRIPTION OF A PARCEL OF LAND LYING IN SECTION 22, TOWNSHIP 43 SOUTH, RANGE 27 EAST LEE COUNTY, FLORIDA

FROM A CONCRETE MONUMENT MARKING THE INTERSECTION OF THE WEST LINE OF SAID LOT J AND THE NORTH LINE OF PEARL STREET 80 FEET WIDE RUN NORTHERLY ALONG SAID WEST LINE FOR 297 FEET TO A CONCRETE MONUMENT AND THE POINT OF BEGINNING OF THE HEREIN DESCRIBED PARCEL. FROM SAID POINT OF BEGINNING CONTINUE NORTHERLY ALONG SAID WEST LINE FOR 99 FEET TO A CONCRETE MONUMENT; THENCE DEFLECT 86 DEGREES 56' 25" TO THE RIGHT AND RUN EASTERLY PARALLEL WITH THE NORTH LINE OF SAID PEARL STREET 110.05 FEET TO A CONCRETE MONUMENT; THENCE DEFLECT 93 DEGREES 03' 35" TO THE RIGHT AND R-UN SOUTHERLY PARALLEL TO THE WEST LINE OF SAID LOT FOR 99 FEET TO A CONCRETE MONUMENT; THENCE RUN WESTERLY PARALLEL TO THE NORTH LINE OF SAID PEARL STREET FOR 110.05 FEET TO THE POINT OF BEGINNING.

SUBJECT TO AN EASEMENT FOR ROADWAY PURPOSES OVER AND ACROSS THE EASTERLY 3 FEET OF THE HEREIN DESCRIBED PARCEL, AND TOGETHER WITH A PART OF RIGHT-OF-WAY FOR INGRESS AND EGRESS OVER AND ACROSS THE EASTERLY 3 FEET OF THE SOUTH 297 FEET OF THE WEST 110.05 FEET OF SAID LOT J.

Ken Pufahl, P.S.M.

PROFESSIONAL SURVEYOR AND MAPPER
FLORIDA CERTIFICATE No. 6126
DATE: 03/31/2022

BOUNDARY AND TOPOGRAPHIC SURVEY
LYING IN SECTION 22, TOWNSHIP 43 SOUTH, RANGE 27 EAST
LEE COUNTY, FLORIDA

0' 120' 240' 360'

PARCEL 1: ALL OF BLOCKS A, B AND C, OF THAT CERTAIN SUBDIVISION KNOWN AS FRANCIS W. PERRY'S SUBDIVISION, AS FILED AND RECORDED IN THE PUBLIC RECORDS OF LEE COUNTY, FLORIDA, IN PLAT BOOK 1, PAGE 18, LYING AND BEING IN SECTION 23, TOWNSHIP 43 SOUTH, RANGE 27 EAST.

PARCEL 2: BLOCK J, OF THAT CERTAIN SUBDIVISION KNOWN AS A. M. STEVENS SUBDIVISION, ACCORDING TO THE MAP OR PLAT THEREOF ON FILE AND RECORDED IN THE OFFICE OF THE CLERK OF THE CIRCUIT COURT OF LEE COUNTY, FLORIDA, IN PLAT BOOK 1, PAGE 28, LESS AND EXCEPTING THE FOLLOWING DESCRIBED PARCEL:

BEGINNING AT THE NORTHEAST CORNER OF GOVERNMENT LOT 1, SECTION 22, TOWNSHIP 43 SOUTH, RANGE 27 EAST; THENCE RUN WESTERLY ALONG THE NORTH LINE OF SAID GOVERNMENT LOT 1, 250.62 FEET TO THE EASTERLY BOUNDARY OF THE SAID LOT J AND THE POINT OF BEGINNING; THENCE RUN NORTH ALONG THE SAID EASTERLY BOUNDARY 458.04 FEET; THENCE RUN WESTERLY TO A POINT ON THE WEST BOUNDARY OF SAID LOT J WHICH IS 450.53 FEET NORTH OF THE NORTH LINE OF SAID GOVERNMENT LOT 1; THENCE SOUTH ALONG THE SAID WEST LINE OF LOT J, 450.53 FEET TO THE NORTH LINE OF SAID GOVERNMENT LOT 1; THENCE EAST ALONG THE SAID NORTH LINE OF LOT 1 TO THE POINT OF BEGINNING. SAID PARCEL CONTAINING 4.55 ACRES MORE OR LESS.

PARCEL 3: LOTS K AND L, A.M. STEVENS, A SUBDIVISION ACCORDING TO THE PLAT THEREOF, AS RECORDED IN PLAT BOOK 1, PAGE 28, PUBLIC RECORDS OF LEE COUNTY, FLORIDA.
LESS AND EXCEPT THE RIGHT OF WAY FOR PEARL STREET; AND SUBJECT TO A PERPETUAL EASEMENT GRANTED TO THE CENTRAL AND SOUTHERN FLORIDA FLOOD CONTROL DISTRICT AS RECORDED IN OFFICIAL RECORD BOOK 200, PAGE 577, PUBLIC RECORDS OF LEE COUNTY, FLORIDA; AND SUBJECT TO A GRANT FOR DISPOSAL OF DREDGED MATERIAL RECORDED IN MISCELLANEOUS BOOK 17, PAGES 497 TO 499, INCLUSIVE AND PAGES 528 AND 529, PUBLIC RECORDS OF LEE COUNTY, FLORIDA.

PARCEL 4:
THE WEST 650.10 FEET OF:
THE SOUTH HALF (S 1/2) OF THE NORTH HALF (N 1/2) OF THE SOUTHWEST QUARTER (SW 1/4) OF THE NORTHWEST QUARTER (NW 1/4) OF SECTION 23, TOWNSHIP 43 SOUTH, RANGE 27 EAST, LEE COUNTY, FLORIDA; CONTAINING 4.906 ACRES, MORE OR LESS.

BEING MORE PARTICULARLY DESCRIBED AS FOLLOWS:
COMMENCING AT THE NORTHEAST CORNER OF SECTION 22, TOWNSHIP 43 SOUTH, RANGE 27 EAST, THENCE S 00°16'01" W, ALONG THE EAST LINE OF SAID SECTION, A DISTANCE OF 1641.70' TO THE POINT OF BEGINNING;

THENCE S 89°25'49" E, ALONG THE NORTH BOUNDARY OF THE WEST HALF 1/2 OF THE S 1/2 OF THE N 1/2 OF THE SW 1/4 OF THE NW 1/4, OF SECTION 23, TOWNSHIP 43 SOUTH, RANGE 27 EAST, A DISTANCE OF 649.17'; THENCE S 00°18'48" W, A DISTANCE OF 2582.93'; TO THE TOP OF BANK OF THE CALOOSAHATCHEE RIVER; THENCE CONTINUE ALONG SAID TOP OF BANK THE FOLLOWING THREE COURSES, S 66°21'41"W FOR 76.91', S 72°21'37 W FOR 279.78' AND N 77°08'56" W FOR 321.48' TO THE WEST BOUNDARY OF BLOCK A OF THAT CERTAIN SUBDIVISION KNOWN AS FRANCIS W. PERRY'S SUBDIVISION, AS FILED AND RECORDED IN PLAT BOOK 1, PAGE 18; THENCE N 00°19'03" E, ALONG THE WEST BOUNDARY OF SAID BLOCK A, A DISTANCE OF 403.20', TO A POINT ON THE NORTH RIGHT OF WAY LINE OF PEARL STREET; THENCE S 88°30'57" W, ALONG SAID NORTH RIGHT OF WAY, A DISTANCE OF 245.11'; THENCE N 00°23'02" E, ALONG THE WESTERN BOUNDARY OF BLOCK K, OF THAT CERTAIN SUBDIVISION KNOWN AS A.M. STEVENS SUBDIVISION, AS FILED AND RECORDED IN PLAT BOOK 1, PAGE 28, A DISTANCE OF 401.36'; THENCE S 87°05'04" W, A DISTANCE OF 232.15'; TO THE WEST BOUNDARY OF BLOCK J; THENCE N 00°21'29" E, ALONG THE WEST BOUNDARY OF SAID BLOCK J, A DISTANCE OF 861.48', TO THE NORTHWEST CORNER OF BLOCK J AND ALSO BEING THE SOUTH LINE OF RANCHO 78 SUBDIVISION; THENCE S 89°47'05" E, ALONG THE NORTH BOUNDARY OF BLOCK J, A DISTANCE OF 231.13, TO THE NORTHWEST CORNER OF BLOCK K; THENCE S 89°38'13" E, ALONG THE NORTH BOUNDARY OF BLOCK'S K AND L, A DISTANCE OF 244.56', TO THE NORTHEAST CORNER OF BLOCK L AND ALSO BEING THE EAST 1/4 CORNER OF SECTION 22, TOWNSHIP 43 SOUTH, RANGE 27 EAST; THENCE N 00°20'32" E, ALONG THE EAST LINE OF SAID SECTION, A DISTANCE OF 657.57'; THENCE N 00°25'37" E, ALONG THE EAST BOUNDARY OF SAID SECTION, A DISTANCE OF 330.49';TO THE POINT OF BEGINNING.

CONTAINING 51.19 ACRES MORE OR LESS.

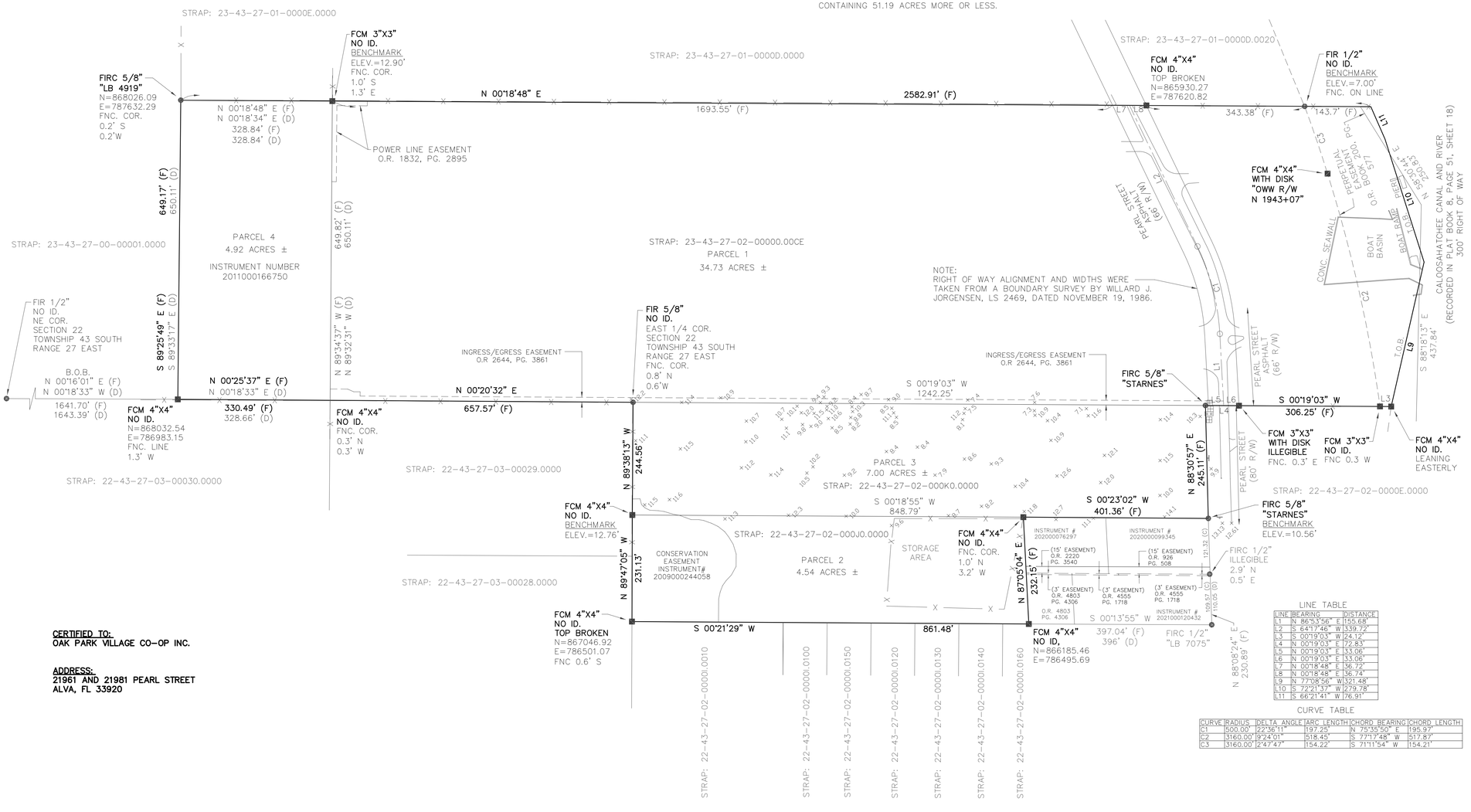

LINE TABLE

LINE	BEARING	DISTANCE
L1	N 86°53'56" E	155.68'
L2	S 64°17'46" W	339.72'
L3	S 00°19'03" W	24.12'
L4	N 00°19'03" E	172.83'
L5	N 00°19'03" E	53.06'
L6	N 00°19'03" E	53.06'
L7	N 00°18'48" E	36.72'
L8	N 00°18'48" E	36.74'
L9	N 77°08'56" W	321.48'
L10	S 72°21'37" W	279.78'
L11	S 66°21'41" W	76.91'

CURVE TABLE

CURVE	RADIUS	DELTA ANGLE	ARC LENGTH	CHORD BEARING	CHORD LENGTH
C1	500.00'	22°36'11"	197.25'	N 75°35'50" E	195.97'
C2	3160.00'	9°24'01"	518.45'	S 77°17'48" W	517.87'
C3	3160.00'	2°47'47"	154.22'	S 71°11'54" W	154.21'

SURVEYORS NOTES
THIS PLAT OF THE HEREON DESCRIBED PROPERTY IS A TRUE AND CORRECT PRESENTATION OF A RECENT SURVEY MADE UNDER AND PLATTED UNDER MY DIRECTION AND TO THE BEST OF MY KNOWLEDGE AND BELIEF MEETS THE MINIMUM TECHNICAL STANDARDS ADOPTED BY THE STATE OF FLORIDA AS PER CHAPTER 5J-17, FLORIDA ADMINISTRATIVE CODE PURSUANT TO CHAPTER 427, FLORIDA STATUTES.

THIS SURVEY WAS PERFORMED BASED ON A TITLE SEARCH REPORT PREPARED BY STATEWIDE LAND TITLE INC, BEARING FILE NO. 21-16985 AND EFFECTIVE THROUGH OF JUNE 28, 2021 AT 8:00 A.M.

UNLESS OTHERWISE SHOWN, INTERIOR IMPROVEMENTS WERE NOT LOCATED.

TOTAL AREA SHOWN IS 51.19 ACRES +/-. PARCEL 1 AREA SHOWN IS TO THE TOP OF RIVER BANK.

THE SURVEYOR HAS MADE NO INDEPENDENT SEARCH FOR EASEMENTS, OWNERSHIP, RESTRICTIVE COVENANTS OR OTHER FACTS THAT MAY AFFECT TITLE.

SUBJECT TO EASEMENTS, RESTRICTIONS AND RESERVATIONS OF RECORD.

THERE ARE NO VISIBLE ENCROACHMENTS EXCEPT THOSE SHOWN.

ELEVATIONS SHOWN HAVE BEEN SURVEYED FROM DATA DERIVED FROM NORTH AMERICAN VERTICAL DATUM (NAVD 88) MONUMENTS (1988 DATUM) EXCEPT WHEN ELEVATIONS ARE NOTED AS BEING ASSUMED.

ONLY ABOVE GROUND EVIDENCE OF UNDERGROUND UTILITIES SHOWN.

THIS SURVEY DOES NOT DETERMINE OR REFLECT OWNERSHIP, TITLE, ZONING OR FREEDOM FROM ENCUMBRANCES AND IS ONLY FOR THE LANDS DESCRIBED ABOVE.

THIS SURVEY IS FOR THE SOLE PURPOSES INTENDED BY THE SURVEYOR AND ONLY FOR THE INDIVIDUALS AND OR INSTITUTIONS LISTED UNDER "CERTIFIED TO".

BEARINGS ARE BASED ON THE EAST LINE OF SECTION 22 BEING N 00°16'01" E.

MEASURED DISTANCES (F) ARE NOTED ONLY WHERE THEY DIFFER FROM PLAT (P) OR CALCULATED (C) DISTANCES.

THE FLORIDA DEPARTMENT OF TRANSPORTATION PERMANENT CONTROL NETWORK WAS UTILIZED ON THIS BOUNDARY SURVEY AND THE DATUM IS NORTH AMERICAN DATUM NAD(83)- ACCURACY IS 1-2 CENTIMETER. THE STATED VERTICAL ACCURACY IS 2-3 CENTIMETER. MEASURED BEARINGS ARE STATE PLANE, FLORIDA WEST ZONE.

LEGEND:

PID#	- PARCEL ID NUMBER
A	- ARC LENGTH
A.C.	- AIR CONDITIONER
B.O.B.	- BASIS OF BEARINGS
B.O.C.	- BACK OF CURB
Ⓒ	- CABLE TV
(C)	- CALCULATED
C.B.	- CATCH BASIN
CB	- CHORD BEARING
CH	- CHORD DISTANCE
⊖	- CLEANOUT
●	- CONC. POST
C.M.	- CONC. MONUMENT
CONC.	- CONCRETE
D	- DELTA
(D)	- DEED
B.O.B.	- BASIS OF BEARINGS
D.E.	- DRAINAGE EASEMENT
⊞	- ELECTRIC SERVICE CABINET
ELEV.	- ELEVATION
E.O.P.	- EDGE OF PAVEMENT
⛛	- FIRE HYDRANT
(F)	- FIELD
FND.	- FOUND
G.E.	- GRATE ELEVATION
GV	- GATE VALVE
I.E.	- INVERT ELEVATION
FIR	- FOUND IRON ROD
FIRC	- FOUND IRON ROD AND CAP
G.W.	- GUY WIRE
(M)	- MEASURED
L.B.E.	- LANDSCAPE BUFFER EASEMENT
(M&P)	- MEASURED AND PLAT
N&D	- NAIL & DISK
N.A.V.D.	- NORTH AMERICAN VERTICAL DATUM (1988)
N.T.S.	- NOT TO SCALE
(NR)	- NOT RADIAL
O.R.	- OFFICIAL RECORD BOOK
(P)	- PLAT
P.B.	- PLAT BOOK
P.C.	- POINT OF CURVATURE
P.C.C.	- POINT OF COMPOUND CURVATURE
P.C.P.	- PERMANENT CONTROL POINT
P.I.	- POINT OF INTERSECT
PG.	- PAGE
P.O.B.	- POINT OF BEGINNING
P.O.C.	- POINT OF COMMENCEMENT
PP	- POWER POLE
P.R.C.	- POINT OF REVERSE CURVATURE
P.R.M.	- PERMANENT REFERENCE MONUMENT
P.T.	- POINT OF TANGENCY
P.U.E.	- PUBLIC UTILITY EASEMENT
PVC	- POLYVINYL CHLORIDE
R	- RADIUS
(R)	- RADIAL
RCP	- REINFORCED CONCRETE PIPE
R.E.	- RIM ELEVATION
RNG.	- RANGE
R/W	- RIGHT OF WAY
SEC.	- SECTION
SIRC	- SET 5/8" IRON ROD "LB 8152"
S.W.	- SIDEWALK
Ⓣ	- TELEPHONE BOX
T.O.B.	- TOP OF BANK
TWP.	- TOWNSHIP
WPB	- WIRE PULL BOX
◇	- BACK FLOW PREVENTER
WM	- WATER METER
WV	- WATER VALVE
Ⓦ	- WELL
	- SIGN
Ⓜ	- STORM MANHOLE
Ⓢ	- SANITARY SEWER
Δ	- DELTA ANGLE
	- TELEPHONE PEDESTAL
	- POWER POLE
	- GUY ANCHOR
	- CENTERLINE
	- FENCE
	- 6' WOOD FENCE
	- OVERHEAD WIRES
	- CONCRETE PAD
5.6	- EXISTING ELEVATION

CERTIFIED TO:
OAK PARK VILLAGE CO-OP INC.

ADDRESS:
21961 AND 21981 PEARL STREET
ALVA, FL 33920

NO.	REVISIONS	DATE
1	ADD EASEMENTS	09/15/21
2	DEFINED SOUTHERLY BOUNDARY	10/19/21
3	ADDED INGRESS/EGRESS EASEMENTS FOR ACCESS TO STORAGE AREA	01/27/22

APPROVED
KENNETH PUFAHL
Digitally signed by KENNETH PUFAHL
Date: 2022.03.31 21:00:55 -04'00'
KENNETH PUFAHL
REGISTERED LAND SURVEYOR PSM #6126
STATE OF FLORIDA
VALID ONLY WITH EMBOSSED SEAL OR DIGITAL SIGNATURE

KP SURVEYING, INC.
LB 8152
2802 W. CYPRESS AVENUE
FT. MYERS, FLORIDA 33905
(239) 462-1901

FIELD SURVEY	01/30/2020 - 03/29/2020
CREW CHIEF	K. PUFAHL
DRAWN BY	KP
SCALE	1"=120'
LIS JOB NO	OAK PARK
SHEET: 1 OF 1	DATE: 04/01/2020

FLOOD ZONES: X AND AE	ELEVATION: N/A AND 7 FEET
DATE OF MAP: 08-28-2008	
COMMUNITY / MAP NUMBER 125124 / 12071C0328F	

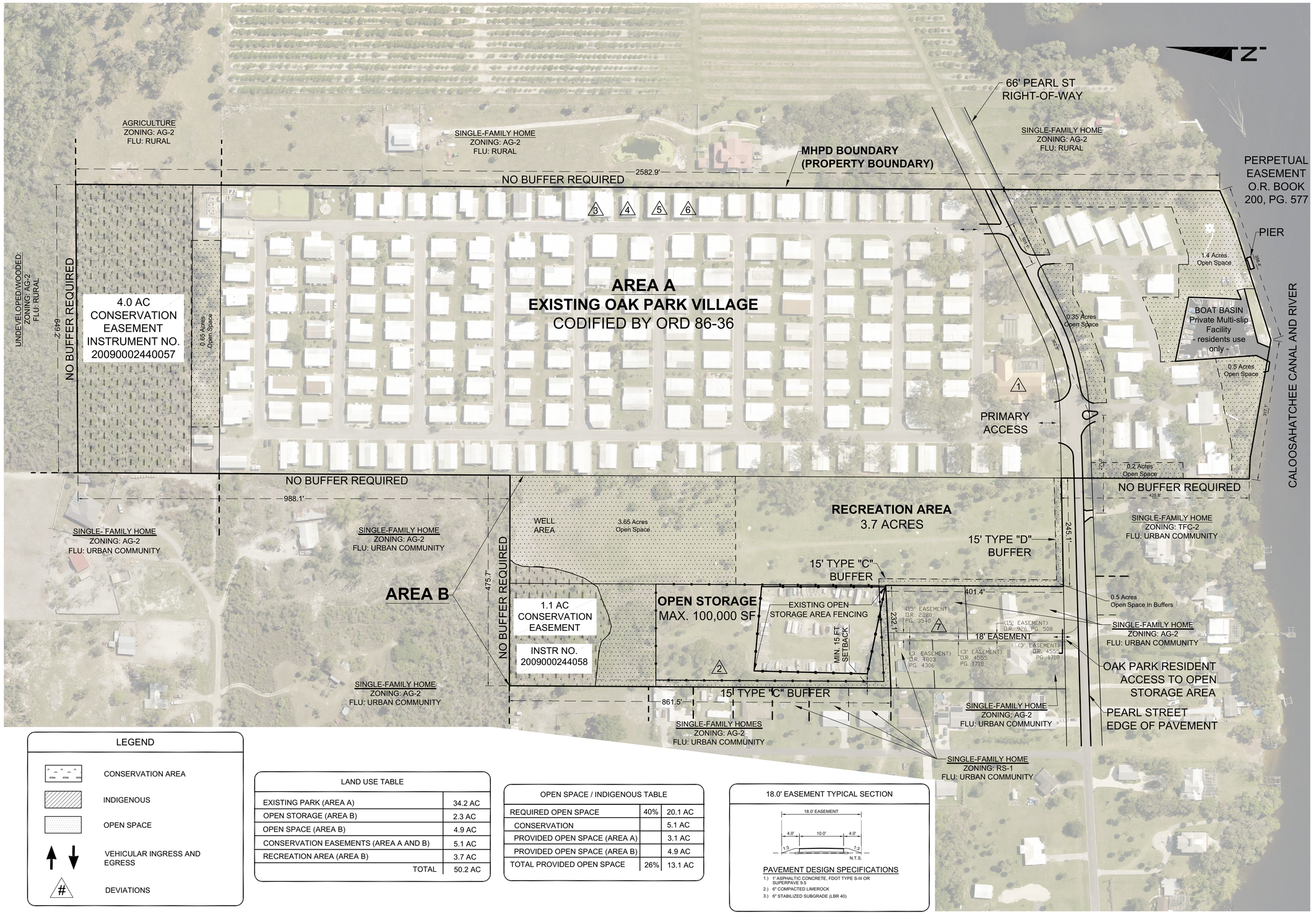

LEGEND

- CONSERVATION AREA
- INDIGENOUS
- OPEN SPACE
- VEHICULAR INGRESS AND EGRESS
- # DEVIATIONS

LAND USE TABLE	
EXISTING PARK (AREA A)	34.2 AC
OPEN STORAGE (AREA B)	2.3 AC
OPEN SPACE (AREA B)	4.9 AC
CONSERVATION EASEMENTS (AREA A AND B)	5.1 AC
RECREATION AREA (AREA B)	3.7 AC
TOTAL	50.2 AC

OPEN SPACE / INDIGENOUS TABLE		
REQUIRED OPEN SPACE	40%	20.1 AC
CONSERVATION		5.1 AC
PROVIDED OPEN SPACE (AREA A)		3.1 AC
PROVIDED OPEN SPACE (AREA B)		4.9 AC
TOTAL PROVIDED OPEN SPACE	26%	13.1 AC

18.0' EASEMENT TYPICAL SECTION

PAVEMENT DESIGN SPECIFICATIONS

1.) 1" ASPHALTIC CONCRETE, FDOT TYPE S-III OR SUPERPAVE 9.5
2.) 6" COMPACTED LIMEROCK
3.) 6" STABILIZED SUBGRADE (LBR 40)

WALDROP ENGINEERING
CIVIL ENGINEERING & LAND DEVELOPMENT CONSULTANTS
25100 BONITA GRANDE DRIVE - SUITE 305 BONITA SPRINGS, FL 34135
P: 239-405-7777 F: 239-405-7899 EMAIL: info@waldropengineering.com

OAK PARK VILLAGE MHPD

MASTER CONCEPT PLAN

CLIENT: OAK PARK VILLAGE COOPERATIVE

LEE COUNTY

MOBILE HOME PLANNED DEVELOPMENT

PLAN REVISIONS
05/05/2021
09/1/2021
11/23/2021
1/19/2022
4/7/2022

0 50 100 200
SCALE IN FEET

FLORIDA CERTIFICATE OF AUTHORIZATION #8636

SET NUMBER: 1092-001-01
SHEET : 1

F:\Projects\1092-001 Oak Park Village\Rezone\Drawings-Exhibits\1092-001-E01 Master Concept Plan\Current Plans\1092001E0205.dwg
4/5/2022 10:54:26 AM

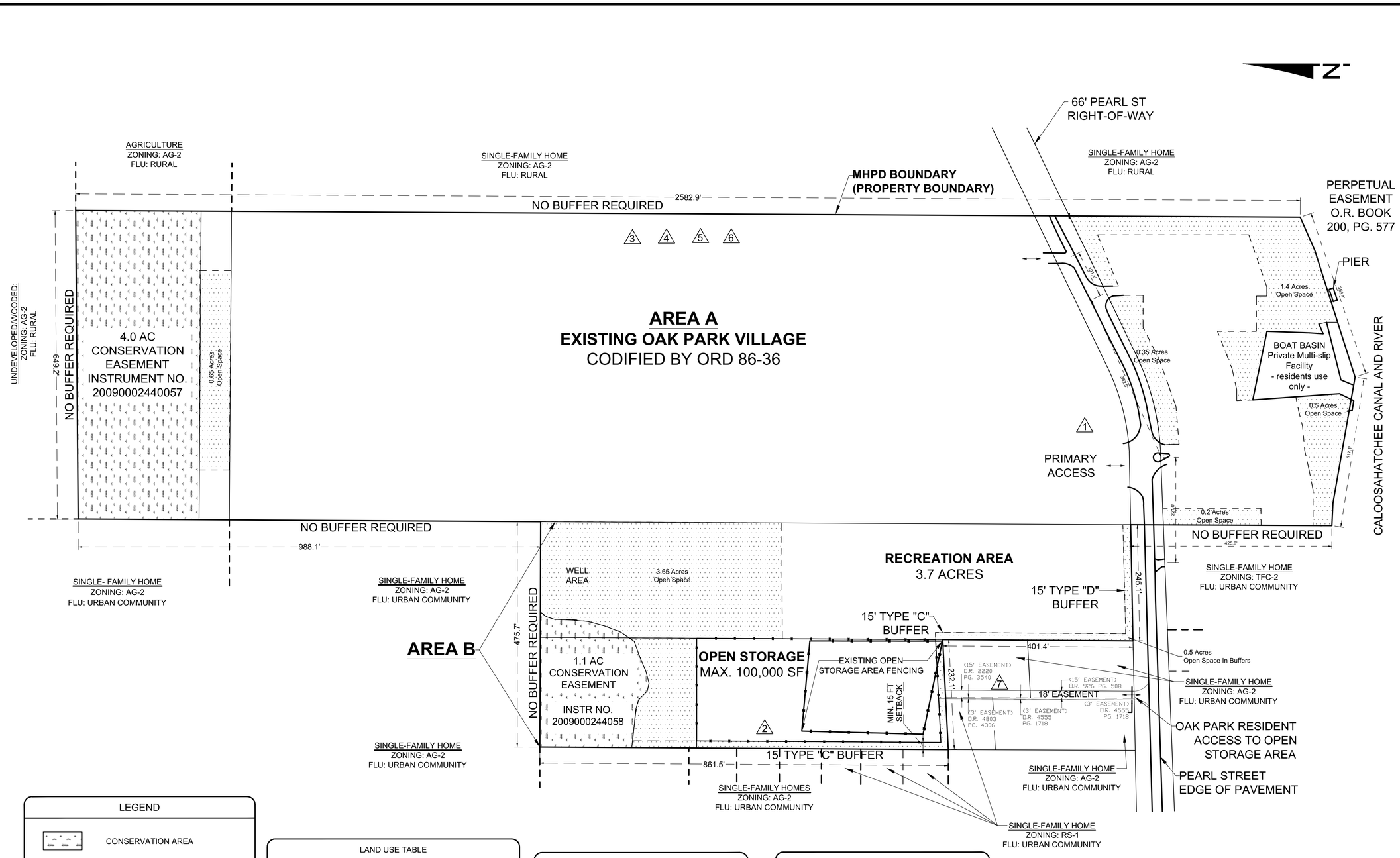

LEGEND

- CONSERVATION AREA
- INDIGENOUS
- OPEN SPACE
- VEHICULAR INGRESS AND EGRESS
- DEVIATIONS

LAND USE TABLE	
EXISTING PARK (AREA A)	34.2 AC
OPEN STORAGE (AREA B)	2.3 AC
OPEN SPACE (AREA B)	4.9 AC
CONSERVATION EASEMENTS (AREA A AND B)	5.1 AC
RECREATION AREA (AREA B)	3.7 AC
TOTAL	50.2 AC

OPEN SPACE / INDIGENOUS TABLE		
REQUIRED OPEN SPACE	40%	20.1 AC
CONSERVATION		5.1 AC
PROVIDED OPEN SPACE (AREA A)		3.1 AC
PROVIDED OPEN SPACE (AREA B)		4.9 AC
TOTAL PROVIDED OPEN SPACE	26%	13.1 AC

18.0' EASEMENT TYPICAL SECTION

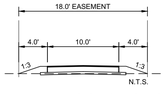

PAVEMENT DESIGN SPECIFICATIONS

1.) 1" ASPHALTIC CONCRETE, FDOT TYPE S-III OR SUPERPAVE 9.5
2.) 6" COMPACTED LIMEROCK
3.) 6" STABILIZED SUBGRADE (LBR 40)

WALDROP ENGINEERING
CIVIL ENGINEERING & LAND DEVELOPMENT CONSULTANTS
25100 BONITA GRANDE DRIVE - SUITE 305 BONITA SPRINGS, FL 34135
P: 239-405-7777 F: 239-405-7599 EMAIL: info@waldropengineering.com

OAK PARK VILLAGE MHPD

MASTER CONCEPT PLAN

CLIENT: OAK PARK VILLAGE COOPERATIVE

LEE COUNTY

MOBILE HOME PLANNED DEVELOPMENT

PLAN REVISIONS
- 05/05/2021
- 09/11/2021
- 11/23/2021
- 1/19/2022
- 4/7/2022

0 50 100 200
SCALE IN FEET

FLORIDA CERTIFICATE OF AUTHORIZATION #8636

SET NUMBER: 1092-001-01

SHEET: 1

F:\Projects\1092-001 Oak Park Village\ Rezone\Drawings-Exhibits\1092-001-E01 Master Concept Plan\Current Plans\1092001E0005.dwg
4/5/2022 10:53:27 AM